Digital Video Technology

Homework #4 –Motion Estimation & Compensation

2013/10/29

This homework is designed for the practice of basic video coding flow. You have to write a program for motion estimation (ME) and compensation (MC) and test it with the given sequences, including stefan.y and weather.y (Test Data).

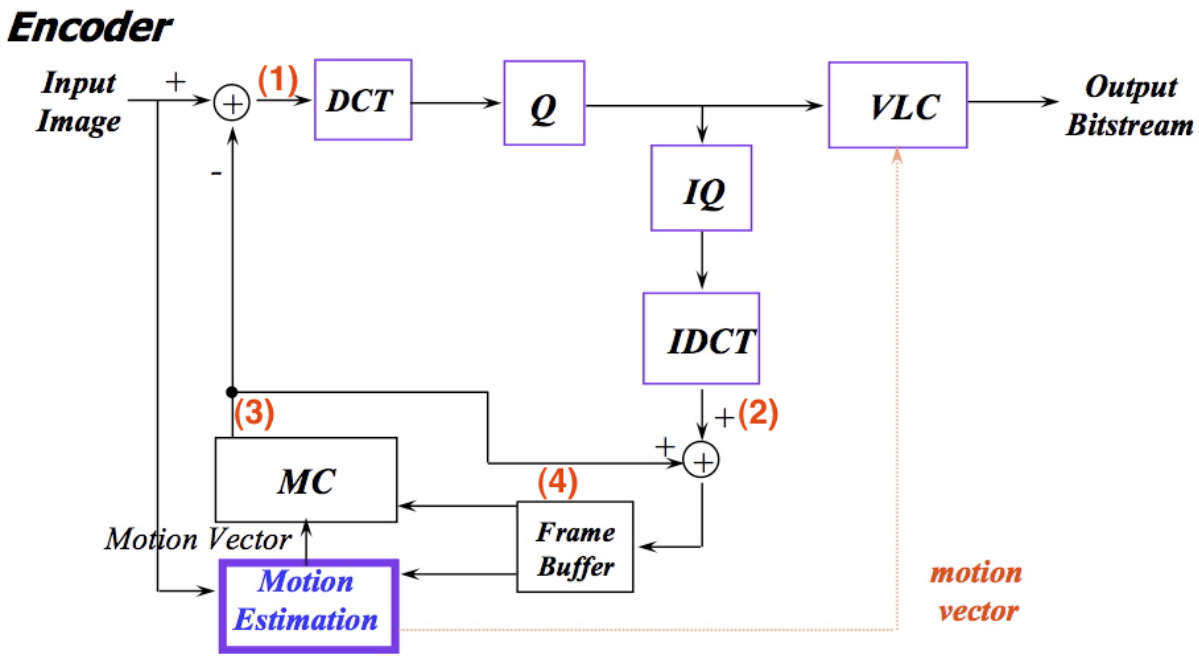

Basic video coding flow.

The constrains of coding flow:

- GOP: [IPPP... ...] (GOP=16, 15 P-frame)
- Block size: 8x8
- Search range: [-8, +7](W8) and [-16, +15] (W16)
- Full search block matching algorithm
- Integer precision

Note:

Dynamic allocating memory (malloc/new/…) for your frame buffer. DO NOT use static array (int frame[352][288]). You can't make sure your program can run on TA's machine.

Your code should use the given sequences to generate the following files:

(1) Save the absolute difference sequences (|reconstructed sequences - original sequences|) in the files - stefan_W8_dif.y, weather_W8_ dif.y, stefan_W16_ dif.y, weather_W16_ dif.y.

(2) Save the residues sequences(after 8x8 DCT, Q, IQ , and 8x8 IDCT) in the files - stefan_W8_res.y, weather_W8_res.y, stefan_W16_res.y, weather_W16_res.y. Where Q tables of I-frame and P-frame are shown below.

8	16	19	22	26	27	29	34
16	16	22	24	27	29	34	37
19	22	26	27	29	34	34	38
22	22	26	27	29	34	37	40
22	26	27	29	32	35	40	48
26	27	29	32	35	40	48	58
26	27	29	34	38	46	56	69
27	29	35	38	46	56	69	83

Q Table (I frame)

16	16	16	16	16	16	16	16
16	16	16	16	16	16	16	16
16	16	16	16	16	16	16	16
16	16	16	16	16	16	16	16
16	16	16	16	16	16	16	16
16	16	16	16	16	16	16	16
16	16	16	16	16	16	16	16
16	16	16	16	16	16	16	16

Q Table (P frame)

(3) Save the reconstructed sequences(after MC) in the files - stefan_W8_rec.y, weather_W8_rec.y, stefan_W16_rec.y, weather_W16_rec.y.

(4) The PSNR of the frame buffer sequences(show the figure of PSNR v.s. frame#) with search range [-8, +7](W8) and [-16, +15](W16) in your report.

(5) (Bonus) Use fast algorithm to implement ME/MC. For example, you can use three-step search to implement ME/MC, and you have to show the figure of PSNR v.s. frame# and the save of computation. **Comparing with Full search algorithm, give comments for the results.**

Requirements:

1. Deadline: 2013/11/11 11:59 PM
   -10 points / day

2. All the files need to be compressed as a single ZIP or RAR file.
   Send this file to TA via FTP:
   Address: 140.112.48.126 Port: 17199
   Account (password):
   The same as the one used in the course website.
   Examples of filename:
   DVT_HW4_R02901001.zip
   DVT_HW4_R02901001_Ver2.zip

3. Required files:
   a. Report
      [Grade of program]:[Grade of report] = 25%:75%
      - A report document with all the pictures in WORD or PDF format.
      - The reconstructed and the absolute difference frames of frame 55 and 66 should be included (pasted) in the report.
      - The chart of PSNR.
      - Give as many comments as possible for the required items, even for the bonus parts.
   b. Source code (C/C++).
   c. Executable file. (*.exe) Your executable file should generate the 12 sequences with the "red filename" in page 2.
   d. A TXT file to describe how to execute your program.

4. DON'T send any sequences to TA. They are too large.

5. Any further question, please email to TA.
   (吳柏辰, pcwu@media.ee.ntu.edu.tw)